TABLE OF CONTENTS

TABLE OF CONTENTS **1**
1- HARDWARE CONNECTION **2**
1-1 Connecting through the Octane System 2
1-2 Alternate method - Connecting directly to a laptop 5
1-3 Using Windows Terminal Software to Connect to TPS Boards 6
1-4 Using Windows Hyperterminal Program 7
2- CONNECTING TO THE SYSTEM CABINET **7**
3- RESULTS OF RESETTING THE TPS **17**
3-1 TPS reset start-up failures 17
3-2 Other TPS reset failures 17
3-3 Nuisance message log messages 17
4- SYSTEM RESTORATION **18**
REVISION HISTORY **19**

Description

This procedure only applies to Octane systems. The System Cabinet debug cable (Part #2198993 and Part #2198994, both Run #818) is intended for the field to inspect the CPU, IPG (or IPG II) and CERD boards for the Octane Host Architecture during power-up and TPS reset. It is intended as a diagnostic, not a corrective, tool. It will replace the LED display from previous IPG models.

Required tools

- Part #2198993 run #818 System Cabinet Debug Cable
- Part #2198994 run #818 System Cabinet Debug Cable
- 25 pin Sub-D female to 9 pin Sub-D female adapter (alternate method only)

1- HARDWARE CONNECTION

1-1 Connecting through the Octane System

1. There are two cables required to connect the debug ports to the host computer. If it is not already connected, connect the system cabinet debug cable. One side of the cable (Part #2198993) has three 25-pin male sub-D connectors and the other side has a single 25-pin male sub-D connector. Connect the side with three connectors to the SCSI Expansion module mounted to the back of the table. Each of the three cable heads is labeled. The connector labeled OW1A16-6 connects to port 6 on the SCSI expansion module. Likewise, connectors OW1A16-7 and OW1A16-8 connect to ports 7 and 8 respectively. See Illustration 1-1 for cable connections.

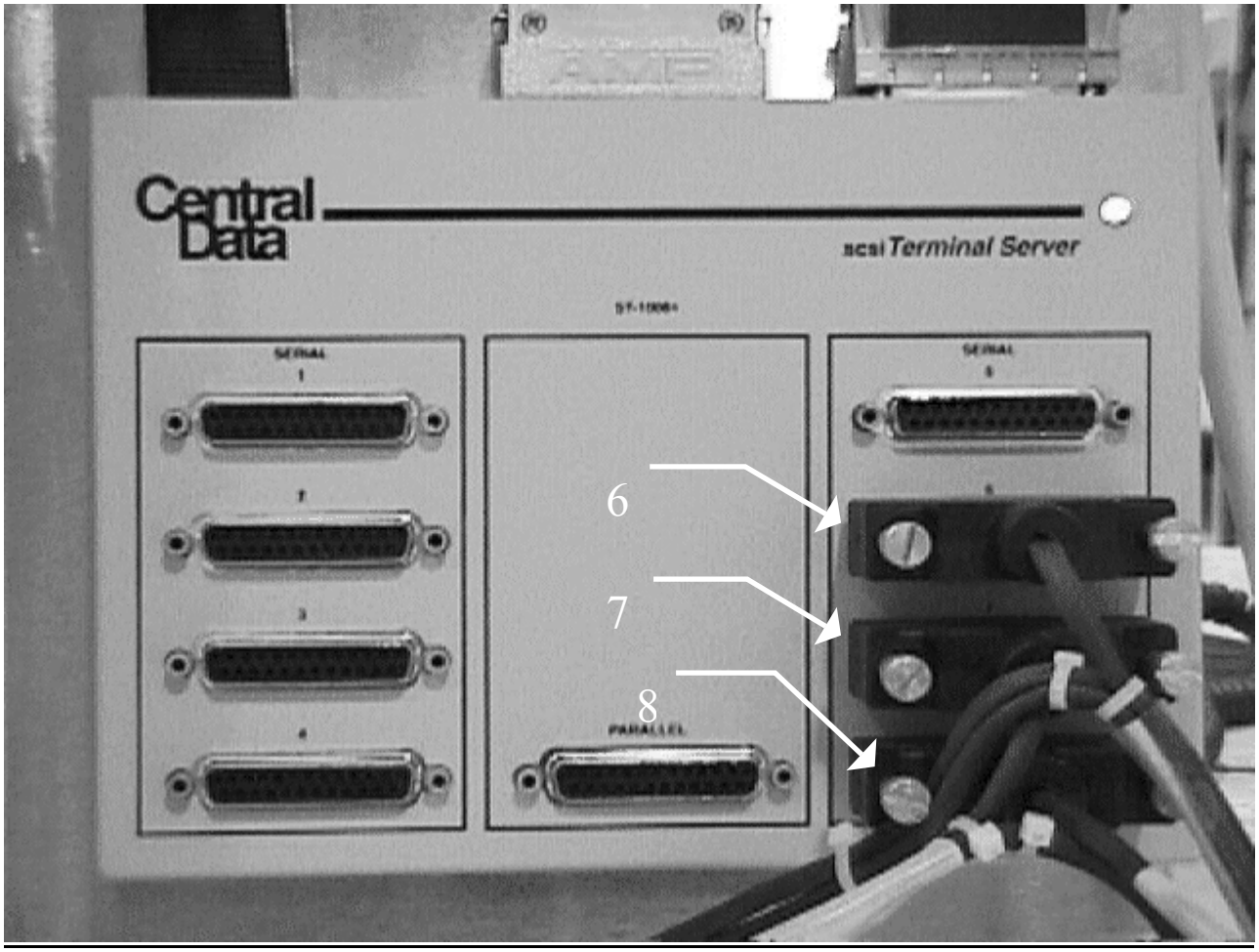

SYSTEM CABINET DEBUG CABLE CONNECTIONS TO SCSI ADAPTER
ILLUSTRATION 1-1

2. Connect the other end (single 25-pin sub-D male connector) to the single-25 pin female sub-D connector on the other cable (Part #2198994 run #818).

3. Connect the unconnected end of Part #2198994 run #818 to the system cabinet. It has one 25-pin sub-D male connector, one 9-pin sub-D female connector and two 6-pin phone jacks. See Illustration 1-2 for cable connections to the system cabinet with an IPG board and illustration 1-3 for a schematic drawing of cable interconnections with an IPG II board. Only three of the four connections will be made. Which three must be connected depends on the type of IPG board that is installed in the system:

   - The 25 pin sub D male connector labeled “CPU J1” connects to J1 on the CPU board.
   - The 9 pin sub D female connector labeled “IPG J7” connects to J7 on the IPG board *if* it is an IPG I board.
   - The 6 pin phone jack labeled “CERD J8” connects to J8 on the CERD board.
   - The 6 pin phone jack labeled “IPG II J7” connects to J7 *if* the IPG board is an IPG II.

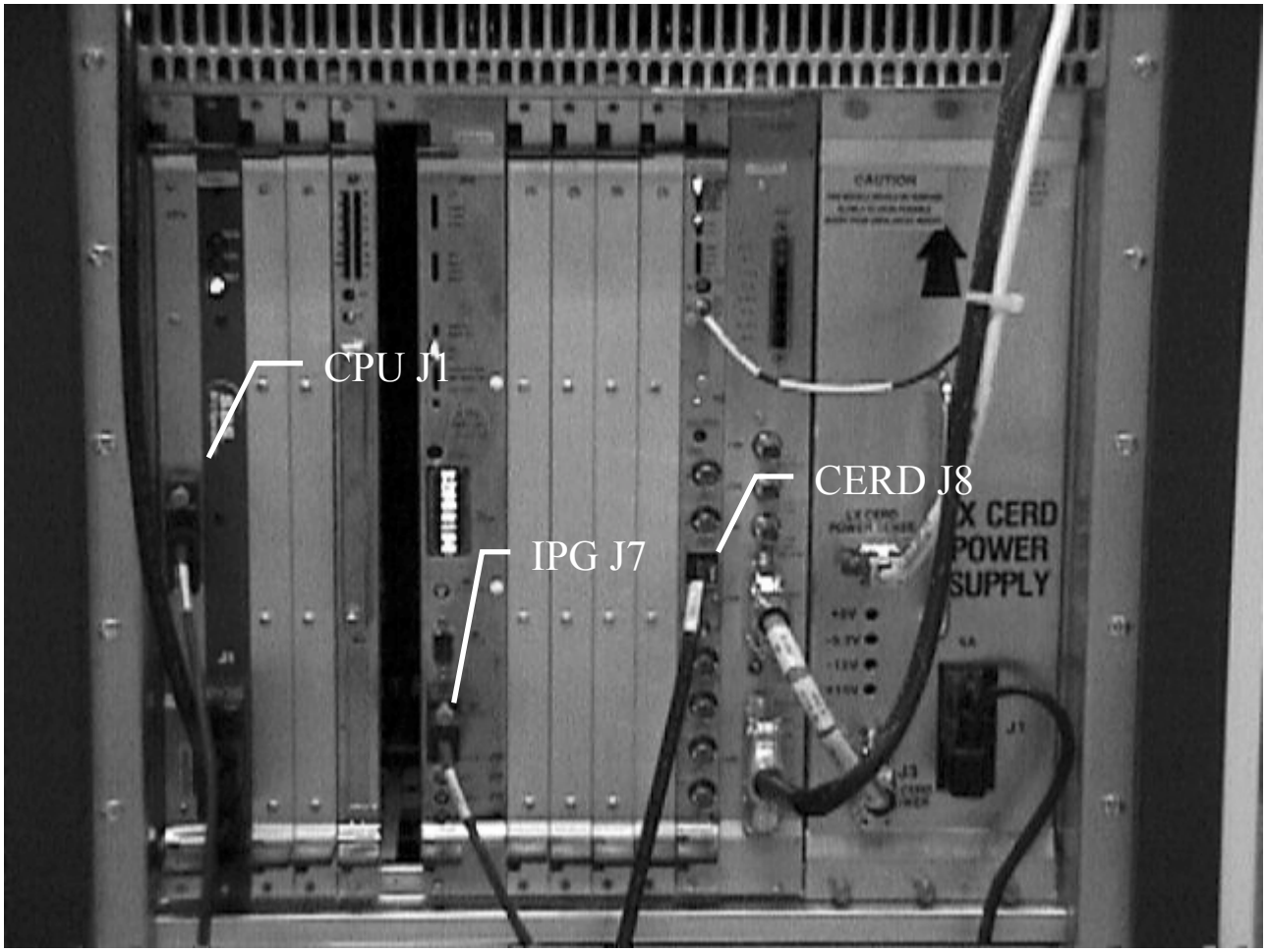

SYSTEM CABINET DEBUG CABLE CONNECTIONS TO SYSTEM CABINET (W/ IPG)
ILLUSTRATION 1-2

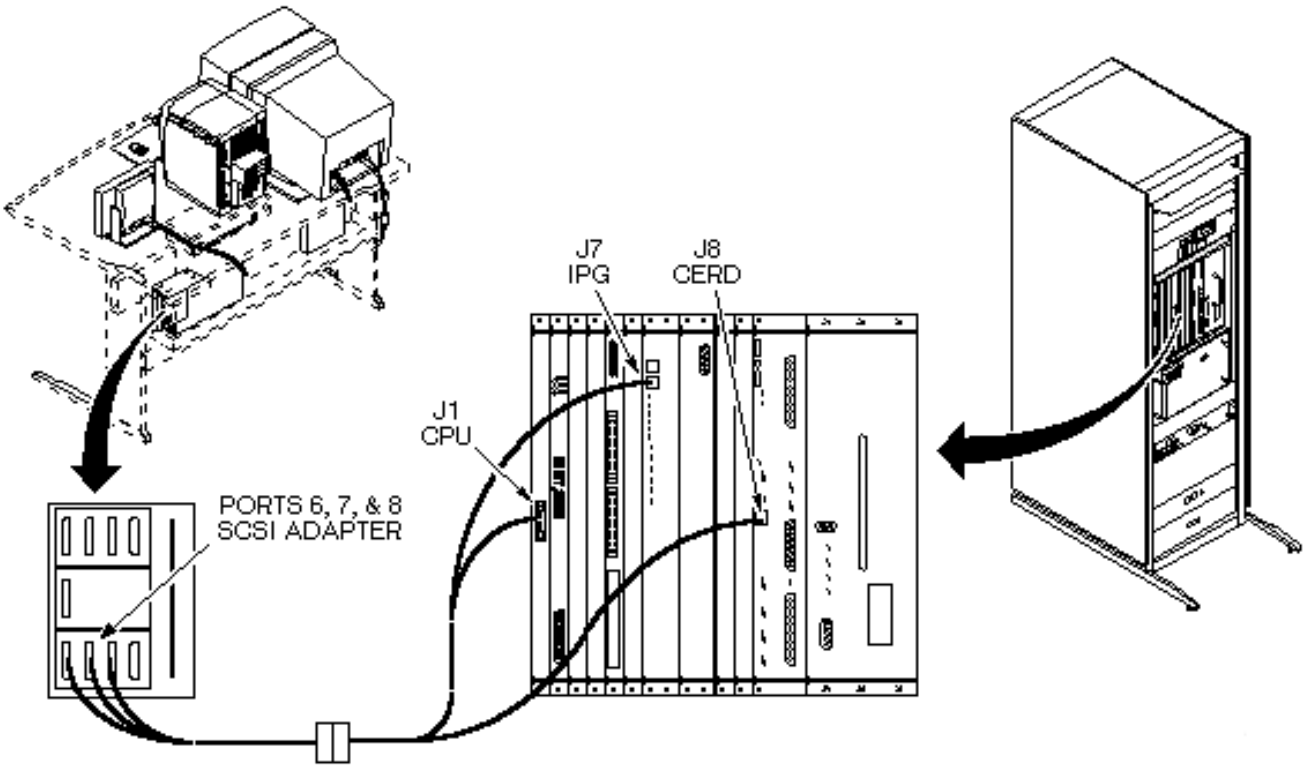

SCHEMATIC DRAWING OF SYSTEM CABINET DEBUG CONNECTIONS (W/ IPG II)
ILLUSTRATION 1-3

4. Reboot the system.

1-2 Alternate method - Connecting directly to a laptop

This alternate method is provided to permit access to the TPS boards even if the operator's console is frozen or a direct connection between the console and the cabinets cannot be made. It differs from the primary method in that a laptop can only connect to one board at a time while the console can connect to all three at once.

Required Software

- Windows (Version 3.1 or later)
- Terminal Communications Program

1. Insert a 25-pin sub-D female to 9-pin sub-D female adapter into the 9-pin serial port in the laptop.
2. The other end of the adapter connects to one of the three 25-pin male sub-D connectors on part #2198993. Table 1-1 shows which connector links to which board. The IPG board (connector OW1A16-6) will be most useful.

TABLE 1-1
CONNECTIONS TO SYSTEM CABINET BOARDS

Connector	Links to Board
OW1A16-6	CPU
OW1A16-7	IPG
OW1A16-8	CERD

3. Connect the single 25-pin sub-D male connector end of part #2198993 to the single 25-pin female sub-D connector on Part #2198994.

4. Connect the other end of Part #2198994 to the system cabinet. It has one 25 pin sub D male connector, one 9 pin sub D female connector and two 6 pin phone jacks. See Illustration 1-2 in Section 1-1 for cable connections to the system cabinet and illustration 1-3 in Section 1-1 for a schematic drawing of cable interconnections:

   • The 25 pin sub D male connector labeled "CPU J1" connects to J1 on the CPU board.
   • The 9 pin sub D female connector labeled "IPG J7" connects to J7 on the IPG board *if* it is an IPG I board.
   • The six pin phone jack labeled "CERD J8" connects to J8 on the CERD board.
   • The six pin phone jack labeled" IPG II J7" connects to J7 *if* the IPG board is an IPG II.

5. At the Laptop Computer, select the Terminal or Hyperterminal Communications Program in the c:/windows directory. If the laptop has Windows Terminal software continue to section 1-3. If it runs Windows Hyperterminal software, then go to section 1-4.

1-3 Using Windows Terminal Software to Connect to TPS Boards

1. Select the Terminal Communications Program by clicking on the start menu and selecting **[Run…]** then enter 'terminal' or double click on the icon for terminal.exe in the c:/windows directory.

2. Select **[Settings]**.

3. Select **[Terminal Emulation]** and set the following parameters:
   -TTY (Generic): On

4. Select **[Terminal Preference]** and set the following parameters:
   -Terminal Modes; Line Wrap: Off; Local Echo: Off; Sound: On
   -CR-> CR/LF; Inbound: Off; Outbound: Off
   -Columns; 80: On
   -Cursor; Block: On; Blinking: On
   -Terminal Font; Fixedsys; 15
   -Translations: None
   -IBM to ANSI: Off
   -Show Scroll Bars: On
   -Buffer Lines: 350
   -Use Function, Arrow, and Ctrl Keys for Windows: On

5. Select **[Text Transfers]** and set the following parameters:
   -Flow Control; Standard Flow Control: On
   -Wordwrap Outgoing Text at Column: Off

6. Select **[Communications]** and set the following parameters:
   -Baud Rate: 9600
   -Data Bits: 8
   -Stop Bits: 1
   -Parity: Xon/Xoff
   -Flow Control: None

-Connector: Com 1 (for a few manufacturers this will be Com 2; if Com 1 does not work after the first attempt, try Com 2)
-Parity Check: Off
-Carrier Detect: Off

1-4 Using Windows Hyperterminal Program

1. Open Windows Hyperterminal by clicking on the start menu and selecting **[Run…]** then enter 'hypertrm'.

2. Select the **Phone Number** tab under **[Properties]** from the **File** menu and set the following parameters:
   -Connect using: Com 1 (for a few manufacturers this will be Com 2; if Com 1 does not work after the first attempt, try Com 2)

3. Select the **Settings** tab under **[Properties]** on the **File** menu and set the following parameters:
   -Function, arrow and ctrl keys acts as Windows keys: Yes
   -Emulation: TTY
   -Backscroll buffer lines: 350

4. Select the **[Terminal Settings]** button from the **[Settings]** tab under the **[Properties]** menu and select the following parameters:
   -Cursor: block
   -Blink: Yes
   -Use Destructive Backspace: No

5. Select OK and return to the **[Properties]** window. Select the **[Configure…]** button and select the following parameters:
   -Bits per second: 9600
   -Data bits: 8
   -Parity: None
   -Stop Bits: 1
   -Flow Control: Xon/Xoff

6. Select the **[Advanced…]** button and select the following parameters
   -Use FIFO buffers: Yes

2- CONNECTING TO THE SYSTEM CABINET

1. At the operator's console, open the service desktop manager window by clicking on the service icon (see Illustration 2-1).

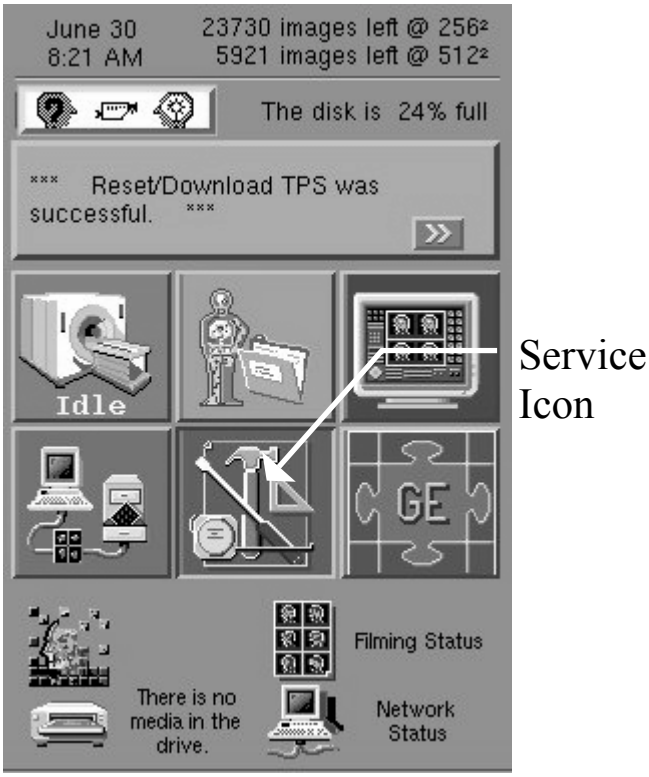

SELECTION ICONS
ILLUSTRATION 2-1

2. Hold the right mouse button down over the desktop wallpaper and drag down the menu to select “command tool.” This opens a command window.

3. Position the mouse over the command window to activate the cursor. Type **cu ipg<Enter>**. The prompt should respond with “connected.”

Note

If the prompt returns either **SYSTEM NOT IN Systems FILE** or **CAN'T FIND DEVICE,** the cable may not be properly connected or the system file may not contain the appropriate connection data. See illustration 2-2 for updated SYSTEM file. It is located in /etc/uucp directory. From the top of the directory type **cd etc/uucp<Enter>** then **More Systems<Enter>** to display Systems file. Be careful, the syntax is case sensitive. Also, check to see that the cable is properly connected. See Section 1 Hardware connection.

```
#ident "$Revision: 1.14 $"
#
# Entries have this format:
#
#Machine-Name Time Type Class Phone Login
#
# Machine-Name node name of the remote machine
# Time day-of-week and time-of-day when you may call
#(e.g., MoTuTh0800-1700). Use "Any" for any day.
#Use "Never" for machines that poll you, but that
#you never call directly.
# Type device type
# Class transfer speed
# Phone phone number (for autodialers) or token (for
#data switches)
# Login login sequence is composed of fields and subfields
#in the format "[expect send] ...".  The expect field
#may have subfields in the format "expect[-send-expect]".
#The special characters in the "expect send" pairs
#is documented in the Dialers file.
#
# Example:
# cuuxb Any ACU 1200 chicago8101242 in:--in: nuucp word: panzer
#
# This example uses one of the example lines in Devices, with a Hayes 2400:
#sgi Any ACU   2400 14155551212 "" @\r\c ogin:--ogin:-\b\d-ogin:--ogin: @nuucp
# This example uses UUCP/TCP and the 't' protocol.  The 'e' protocol
# could be used instead.
#rhost Any TCP,t Any rhost.foo.com ogin: Urhost assword: guessit
# This example is for an ISDN connection for a PPP link.
#ishost Any ISDN Any "" "" ISDNCALL[64]5551212 CONNECTED
tps Any Direct5 9600 "" "" "" ""
ipg Any Direct6 9600 "" "" "" ""
cerd Any Direct7 9600 "" "" "" ""
```

UPDATED SYSTEM FILE
ILLUSTRATION 2-2

4. Leave the *IPG command window open and move it to the top of the screen* so that it is clear which window tracks the IPG board and repeat steps 2 and 3 in Section 2. This time, instead of typing "cu ipg" type **cu cerd<Enter>** in one window and **cu tps<Enter>** in the other. *Move the CPU (cu tps) window to the middle of the screen and the CERD window to the bottom.* If possible, arrange them and the Service Desktop Manager (see Illustration 2-3 below) so that they can all be seen at once (see illustration 2-4 for arrangement of windows).

DESKTOP SERVICE MANAGER
ILLUSTRATION 2-3

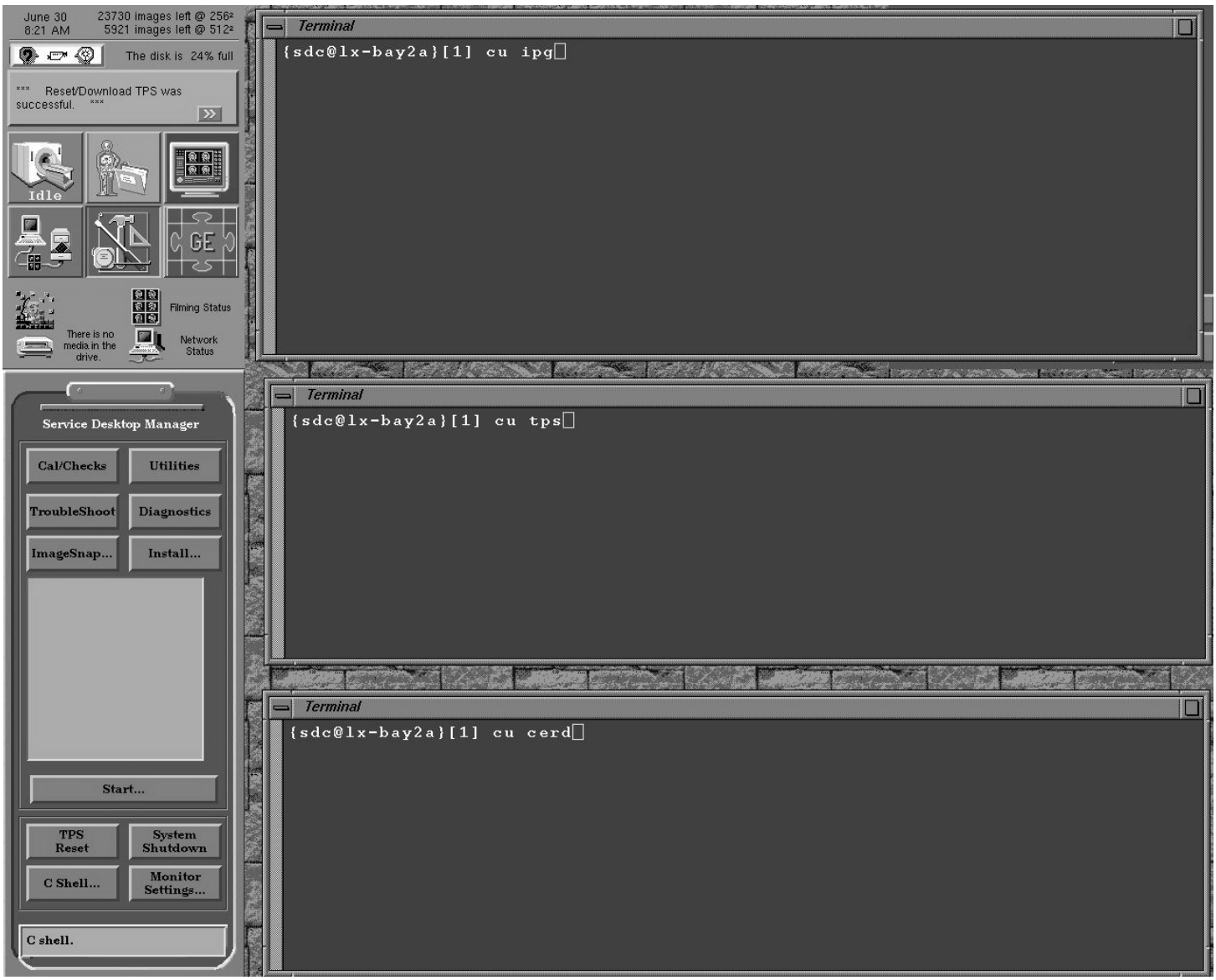

MAKING ALL WINDOWS VISIBLE
ILLUSTRATION 2-4

5. There should now be three windows open. On the Desktop Service Manager click on **TPS Reset.**

6. The system will prompt to confirm TPS Reset. Click **[OK]** with the mouse. The TPS will now reset. The process can be observed through the three open windows and will take approximately 90 seconds. A “normal” TPS reset will look comparable to Illustration 2-5 for the IPG window, Illustration 2-6 for the CPU window, and Illustration 2-7 for the CERD window. The CERD window at the bottom of the screen may not show anything if the cable has just been installed. The TPS must be reset a second time to make it active.

```
{sdc@lx-bay4}[1] cu ipg
Connected

  IPG POWER-UP DIAGNOSTICS

Testing EPROM, Local Bus & RAM:  Tests Passed
Testing Multi-Function Peripheral:  Test Passed
Testing Floating Point Processor:  Test Passed
Testing VMEchip:  Test Passed
Testing Inter_Processor:  Test Passed


You have 2 seconds to enter Shell Mode.

    CR, LF, SP, or ESC - Enter Shell Mode

                    VxWorks System Boot

CPU: GEMS IPG
Version: 4.0.2
Creation date: Wed Apr 10 17:02:49 CDT 1991

Press any key to stop auto-boot...
 0
auto-booting...

int: CM_WATCHDOG timeout 1 on NCB 0
int: CM_WATCHDOG timeout 2 on NCB 0
int: CM_WATCHDOG timeout 3 on NCB 0

 227416 TEXT + 61300 DATA + 41660 BSS
Starting at 0x801000...

Setting board defaults


 ]]]]]]]]]]]]]]]]]]]]]]]]]]]]]]]]]]]]]]]]
 ]]]]]]]]]]]]]]]]]]]]]]]]]]]]]]]]]]]]]]]
 ]]]]]]]]]]]]]]]]]]]]]]]]]]]]]]]]]]]]]]
     ]]]]]]]]]]]  ]]]]    ]]]]]]]]]]      ]]           ]]]]        TM
 ]    ]]]]]]]]]  ]]]]]]    ]]]]]]]]      ]]           ]]]]
 ]]    ]]]]]]]  ]]]]]]]]    ]]]]]] ]    ]]           ]]]]
 ]]]    ]]]]] ]    ]]]  ]    ]]]] ]]]   ]]]]]]]]]  ]]]] ]] ]]]]  ]]   ]]]]]
 ]]]]    ]]]  ]]    ]  ]]]    ]] ]]]]] ]]]]]]   ]] ]]]]]]] ]]]] ]]   ]]]]
 ]]]]]    ]  ]]]]    ]]]]]    ]]]]]]]] ]]]]   ]] ]]]]    ]]]]]]]    ]]]]
 ]]]]]]     ]]]]]    ]]]]]]   ]  ]]]]]  ]]]]   ]] ]]]]    ]]]]]]]]    ]]]]
 ]]]]]]]    ]]]]]  ]    ]]]]]]  ]    ]]]   ]]]]   ]] ]]]]    ]]]] ]]]]    ]]]]
 ]]]]]]]]  ]]]]]  ]]]    ]]]]]]]     ]     ]]]]]]]  ]]]]    ]]]]  ]]]] ]]]]]
 ]]]]]]]]]]]]]]]]]]]]]]]]]]]]]]
 ]]]]]]]]]]]]]]]]]]]]]]]]]]]]]      Development System
 ]]]]]]]]]]]]]]]]]]]]]]]]]]]]
 ]]]]]]]]]]]]]]]]]]]]]]]]]]]       VxWorks version 5.0.2.
 ]]]]]]]]]]]]]]]]]]]]]]]]]]       KERNEL: WIND version 2.0.
 ]]]]]]]]]]]]]]]]]]]]]]]]]       Copyright Wind River Systems, Inc., 1984-1991

                       CPU: GEMS IPG.  Processor #0.
                      Memory Size: 0x3ff000.
```

```
-> cm_autolog_init: reading trigger list file
task spawned: id = 0xa2c218, name = t1

 IPG up
```

IPG DURING "TYPICAL" TPS RESET
ILLUSTRATION 2-5

```
68040 POWERUP DIAGNOSTICS                    <-- IPG DISPLAY = "DRAM"

Testing EPROM & RAM:  Tests Passed
Testing Multi-Channel Controller:  Test Passed
Testing VME Peripheral Controller:  Test Passed
Testing Floating Point Coprocessor:  Test Passed
Testing Clock:  Test Passed
Testing Static RAM:  Test Passed
Testing CPU-IPG Inter_Processor:  Test Passed     <-- IPG DISPLAY = "DRAM", "MFP"
                                                       "INTERPRO", "PUD PASS"
You have 2 seconds to enter Shell Mode.

    CR, LF, SP, or ESC - Enter Shell Mode

                    VxWorks System Boot

Copyright 1984-1991  Wind River Systems, Inc.

CPU: Motorola 25 MHz MVME-162
Version: 5.0.2
Creation date: Fri Sep 30 12:50:18 CDT 1994       <-- IPG DISPLAY = "IPG BOOT"

Press any key to stop auto-boot...
 1 0
auto-booting...

boot device          : vd
processor number     : 0
host name            : host
file name            : /usr/g/bin/system68040mv
inet on ethernet (e) : 90.0.0.50
host inet (h)        : 90.0.0.3
user (u)             : genesis
flags (f)            : 0x0
Attaching network interface vd0... done.          <-- (1) TPS/ISE Bit3 attempts to connect
                                                       to the Host Bit3 Board
Loading... 478916 + 96268 + 58180                 <-- (2) TPS Download begins.
Starting at 0x1000...

Attaching network interface lo0... done.
Mountng "/usr" from host "lx-syc1"... done.
Mounting selected NFS file systems from host lx-syc1
opening file: lx-syc1:/etc/vxfstab
openig file: lx-syc1:/etc/vxhosts
mountd lx-syc1:/ as /
faile to mount lx-syc1:/usr
mountd lx-syc1:/usr/g as /usr/g
```

```
Setting board defaults

 ]]]]]]]]]]]]]]]]]]]]]]]]]]]]]]]]]]]]]]]]
 ]]]]]]]]]]]]]]]]]]]]]]]]]]]]]]]]]]]]]]]]
 ]]]]]]]]]]]]]]]]]]]]]]]]]]]]]]]]]]]]]]]
     ]]]]]]]]]]  ]]]]     ]]]]]]]]]]      ]]            ]]]]         TM
 ]     ]]]]]]]]]  ]]]]]]     ]]]]]]]]       ]]             ]]]]
 ]]     ]]]]]]]  ]]]]]]]]     ]]]]]] ]      ]]              ]]]]
 ]]]     ]]]]] ]    ]]] ]     ]]]] ]]]   ]]]]]]]]]  ]]]] ]] ]]]]  ]]   ]]]]]
 ]]]]     ]]]  ]]    ]  ]]]     ]] ]]]]] ]]]]]]   ]] ]]]]]]] ]]]] ]]   ]]]]
 ]]]]]     ]  ]]]]     ]]]]]      ]]]]]]]] ]]]]   ]] ]]]]    ]]]]]]]    ]]]]
 ]]]]]]      ]]]]]     ]]]]]]    ]  ]]]]]  ]]]]   ]] ]]]]    ]]]]]]]]    ]]]]
 ]]]]]]]    ]]]]]  ]    ]]]]]]  ]    ]]]   ]]]]   ]] ]]]]    ]]]] ]]]]    ]]]
 ]]]]]]]]  ]]]]]  ]]]    ]]]]]]]      ]     ]]]]]]]  ]]]]    ]]]]  ]]]] ]]]]]
 ]]]]]]]]]]]]]]]]]]]]]]]]]]]]]]]]
 ]]]]]]]]]]]]]]]]]]]]]]]]]]]]]]]      Development System
 ]]]]]]]]]]]]]]]]]]]]]]]]]]]]]]
 ]]]]]]]]]]]]]]]]]]]]]]]]]]]]]       VxWorks version 5.0.2.
 ]]]]]]]]]]]]]]]]]]]]]]]]]]]]       KERNEL: WIND version 2.0.
 ]]]]]]]]]]]]]]]]]]]]]]]]]]]       Copyright Wind River Systems, Inc., 1984-199
                           CPU: Motorola 25 MHz MVME-162.  Processor #0.
                           Memory Size: 0x10800000.
                                          <-- IPG DISPLAY = "IPG RDY"
-> cm_auolog_init: reading trigger list file
Auto tart of Tardis has begun.

perorming chassis config check...
 accessing /w/config/MRconfig.cfg
 checing actual chassis contents...

MedAM:  Starting Auto Configuration...
0x10740c0 (t1): HOST: CEID 1, 0MB, Mboard 0
0x107740c0 (t1): RACE_860: CEID 2, 8MB, Mboard 1
0x107740c0 (t1):                    VME-PM x40000000 size x20000000, A32
CE 2 (RECON_CE2), Never used, unreserved,  RACE_860 with 8MB, on MB 1, vector 0x
b0, level 4
CEID 2 reset successfully
  CERD config info (posted by boot) :
   CERD Flash File : cerd_flash_ultimate:0 81.24f62
   CAP SRAM size  : 00020000 (128 K)
   ASC SRAM size  : 00020000 (128 K)
   Num CERD Rcvrs : 1
   Field Strength : 15000
   CERD bd rev    : 2.1
   RAP LCA rev    : 3
 Fast Receiver board not present.
TPS config info written to /w/config/TPS_config.

calling cx_init...
cx_init: loading /usr/g/bin/cerd.P3.i40 (id=7)

MedCAM:  Starting Initialization...
0x104a670 (t2): HOST: CEID 1, 0MB, Mboard 0
0x104da670 (t2): RACE_860: CEID 2, 8MB, Mboard 1
0x104da670 (t2):                    VME-PM x40000000 size x20000000, A32
Initilizing PAS
                                   <-- IPG Display = "DO SPI", "SPI LOAD"
```

```
MedAM Initialized!  1 Processors,  127.75 Meg


Dowloading ASC file to CERD

Dowloading CAP file to CERD                <-- IPG DISPLAY = "DO SPU", "SPU LOAD"
CERD oot successful
cerd.i40 successfully loaded

Turning cerd_network internal packet logging ON
CERD Network initialized...
TPSSChas the SHRD_MEM_PTR !!!
AD ofset for receiver 0 = 0
AD offset for receiver 1 = 0
AD offset for receiver 2 = 0
AD offset for receiver 3 = 0
Auto tart of Tardis done. CERD             <-- IPG DISPLAY = "12EF0100"
```

CPU DURING "TYPICAL" TPS RESET
ILLUSTRATION 2-6

```
CERD Boot has started
---------------------
Boot Block Rev 3.1  (01-OCT-95)
TPS did not respond
Detected a regular reset
Checksum test passed on Flash Memory
Executing CAP Boot Module 2 in FLASH memory
CAP Boot Module 2 has started
Programming LCA's
LCA programming was successful
Downloading ASC Power up diags file
Running Power up diags on the ASC
ASC Power up diags have PASSED
Downloading ASC Boot diags file
Getting ASC configuration information
Press any key within 5 seconds to access the boot menu
Running Boot diags on the ASC
ASC Boot diags have PASSED
Running final powerup diags
... testing remainder of SRAM 00040000
... testing Exciter Attenuator DPR
... testing VSB DPR
Press any key to access the boot menu

[*********   SCREEN CLEARS ********************]

CERD Boot has started
---------------------
Boot Block Rev 3.1  (01-OCT-95)
TPS is up
Detected soft reset
Checksum test passed on Flash Memory
Executing CAP Boot Module 2 in FLASH memory
CAP Boot Module 2 has started
Programming LCA's
LCA programming was successful
Press any key to access the boot menu
Loading ASC file from TPS
Loading CAP file from TPS
Received command to start CAP and ASC
Executing CAP and ASC Programs
Starting CAP Program at Address 00010254

CAP_Shell>
```

CERD DURING “TYPICAL” TPS RESET
ILLUSTRATION 2-7

3- RESULTS OF RESETTING THE TPS

3-1 TPS reset start-up failures

1. By connecting directly to the CPU, CERD, and IPG through the system cabinet debug cable, the error messages that previously were displayed on the IPG LED are still accessible. If the system fails any startup tests, a failure display will appear in the IPG window see Illustration in Section 2. A sample of an interconnect failure is shown in Illustration 3-1. The number below "ERRMES" is the error message that would previously have appeared on the IPG LED.

```
 IPG POWER-UP DIAGNOSTICS

Testing EPROM, Local Bus & RAM:  Tests Passed
Testing Multi-Function Peripheral:  Test Passed
Testing Floating Point Processor:  Test Passed
Testing VMEchip:  Test Passed
Testing Inter_Processor:  Non-Fatal Failure Detected !

                AB    PAR       PAR       PAR       PAR       PAR
   ERRMES  CODE    1         2         3         4         5
  02222138   0064  00000000 00000000 00000000 00000000 00000000
```

POWER-UP FAILURE
ILLUSTRATION 3-1

2. The source of the error can be determined by using the Err No Decoder which is accessed by selecting the "Utilities" box on the Desktop Service Manager See Illustration 2-3 in Sec 2. Click on **"Err No Decoder"** and press the **[Start…]** button.

3. The Err No Decoder will prompt: "*Please enter the error No. (s or q to quit).*" Enter the error number given in the IPG window ***without the leading zero***. Press enter and the utility will return the nature of the error.

4. Hit "s" or "q" and <enter> to exit the program.

3-2 Other TPS reset failures

1. Other TPS reset failures may not cause a TPS startup failure in the IPG window. These types of failures may cause a window to "hang" or the window may display a different type of error message. An example of this is shown below which was caused a Bit 3 communication problem. The CPU window hangs while the IPG window shows the following:

```
Attaching network interface vd0…
 Failure, can't load boot file!
```

2. The three windows can be monitored to find other non-fatal errors. See illustration 2-5, illustration 2-6, and illustration 2-7 in Section 2, for a typical TPS reset.

3-3 Nuisance message log messages

On TPS reset, sometimes the following message will appear:

```
Thu Jan 23 11:33:05 1997
Host: lx-syc1           Proc: NSP        Error: 2223655
File: MrMailMgr.m        Line: 567
RPC call fails, remote program is not registered, NMRID:NSP.
```

Other times upon reset, the following three messages will appear:

```
Thu Jan 23 11:55:23 1997
Host: lx-syc1           Proc: scn        Error: 2223621
File: connect_mgr.c      Line: 196
Internal Software Error. Can't callback on undefined NMRID:ifcc

Thu Jan 23 11:55:23 1997
Host: lx-syc1           Proc: scn        Error: 2223625
File: MrMailMgr.m        Line: 1329
Send   packet   opcode:30004   seqnum:6   rev:2   type:1   length:0
req:SCAN_01_NORresp:ifcc status:0 failed

Thu Jan 23 11:55:23 1997
Host: lx-syc1           Proc: scn        Error: 0
File: msgFile.c          Line: 328
The message key -1 was not found.
```

The following message gets logged reliably upon TPS reset, and can be ignored:

```
Mon Apr 14 22:01:53 1997
Host: lx-syc0            Proc: NSP        Error: 2223840
File: PMH.m              Line: 707
NSP failed in synchronizing Unix time.
```

These do not necessarily indicate a problem and can usually be ignored.

4- SYSTEM RESTORATION

1. Close the IPG, CPU, and/or CERD connection windows by right clicking on the window and dragging down the menu to exit each.

2. If the system cabinet debug cable was not attached to the equipment at the beginning of this procedure, remove it and return it to where it was found.

REVISION HISTORY

REV	DATE	AUTHOR	PRIMARY REASONS FOR CHANGE
0	July 20, 1998	J. Saperstein	Initial System Cabinet Debug cable procedure written.